ARCHITECTURAL METAL WORKS

1483 67th Sreet
Emeryville CA, 94608
Tel. (510) 601-1240
Fax: (510) 601-1440

Sketch

Date: MARCH 21, 2013 AMW No: 1301-2

Project: AMW MASTER DETAIL

By:

Drawing Sheet or Spec: RAIL CONNECTION DETAIL

Scale: N.T.S. **Sketch No.:** 02

Description:

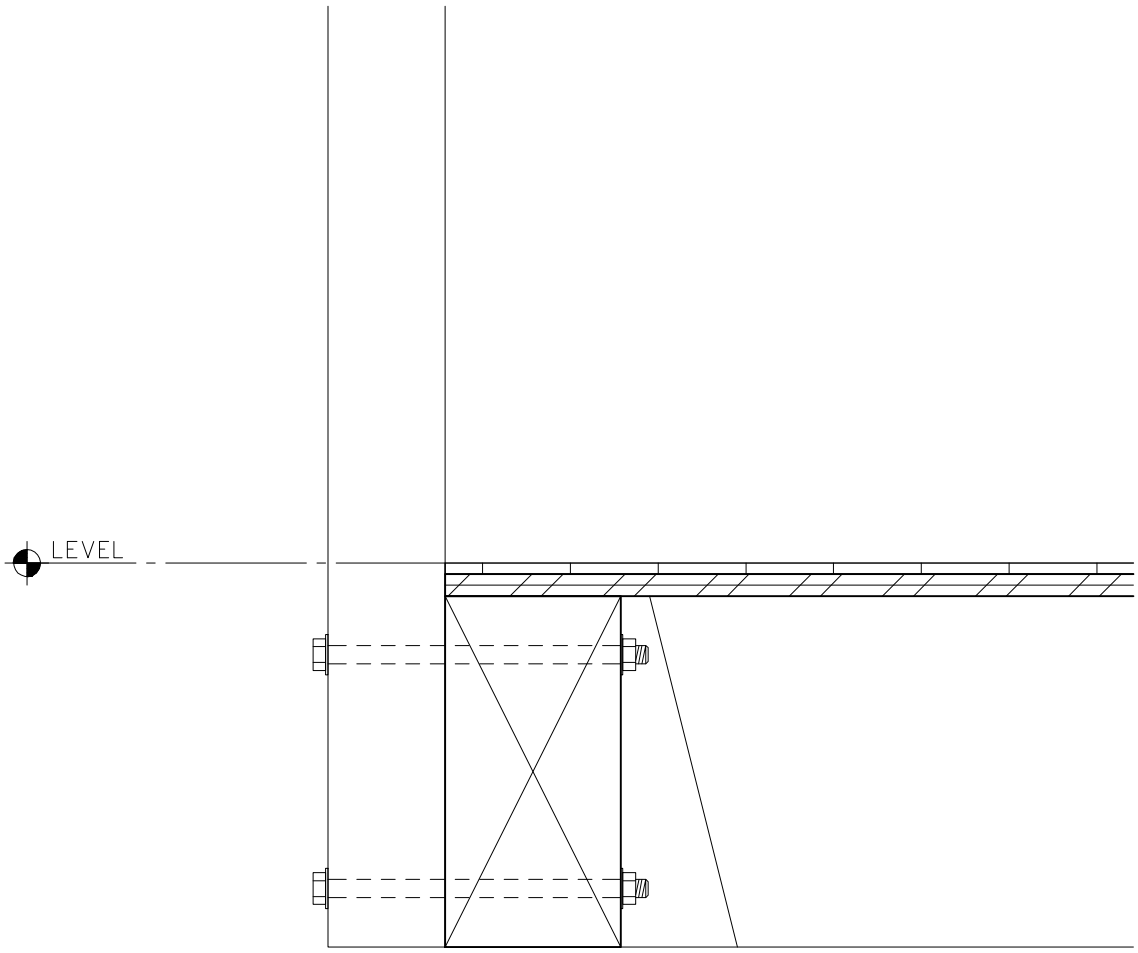

SIDE MOUNTED

THROUGH BOLTS PREFERRED, LAG BOLTS IF NO ACCESS